eagleyard PHOTONICS

We focus on power.
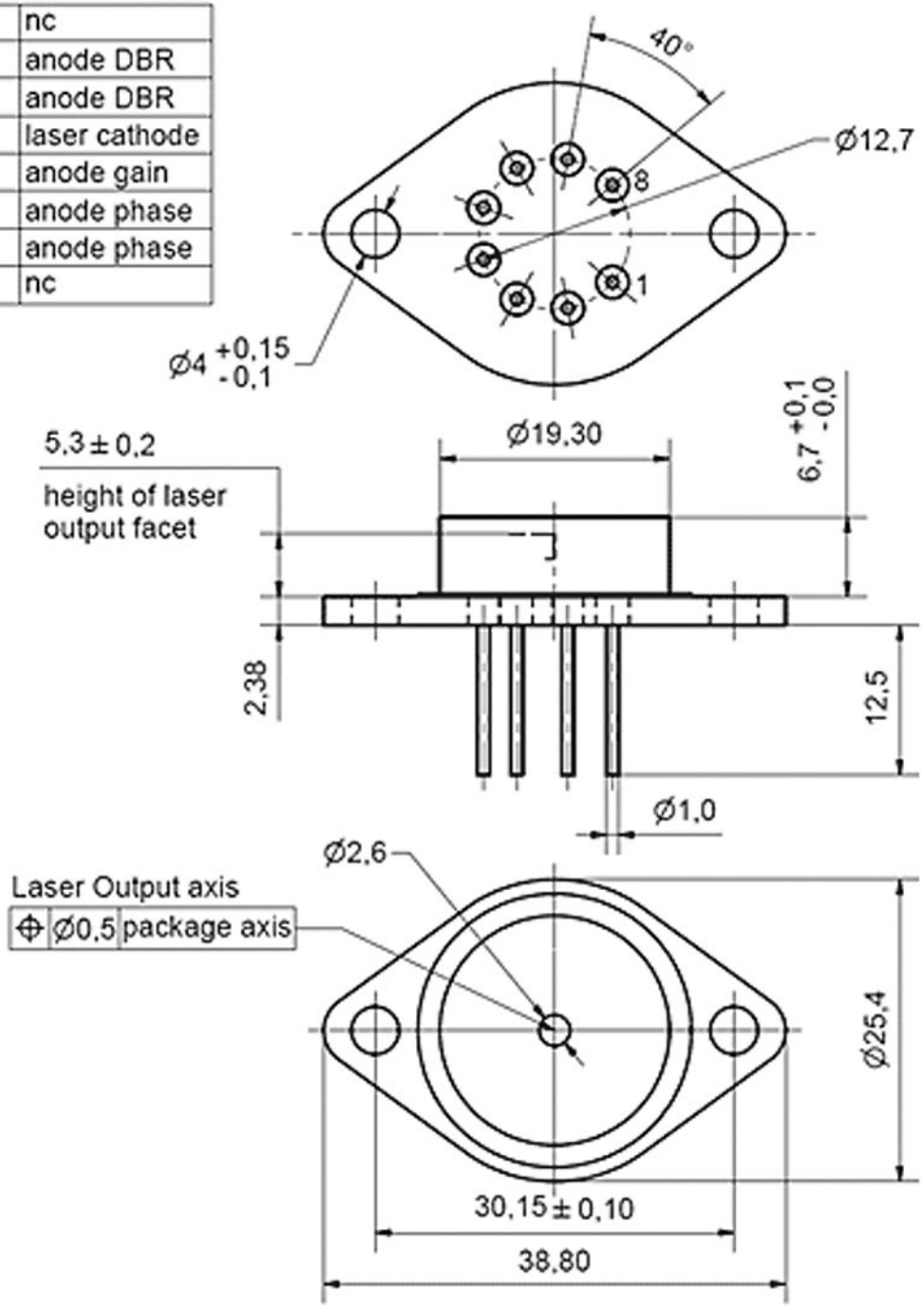
1	nc
2	anode DBR
3	anode DBR
4	laser cathode
5	anode gain
6	anode phase
7	anode phase
8	nc